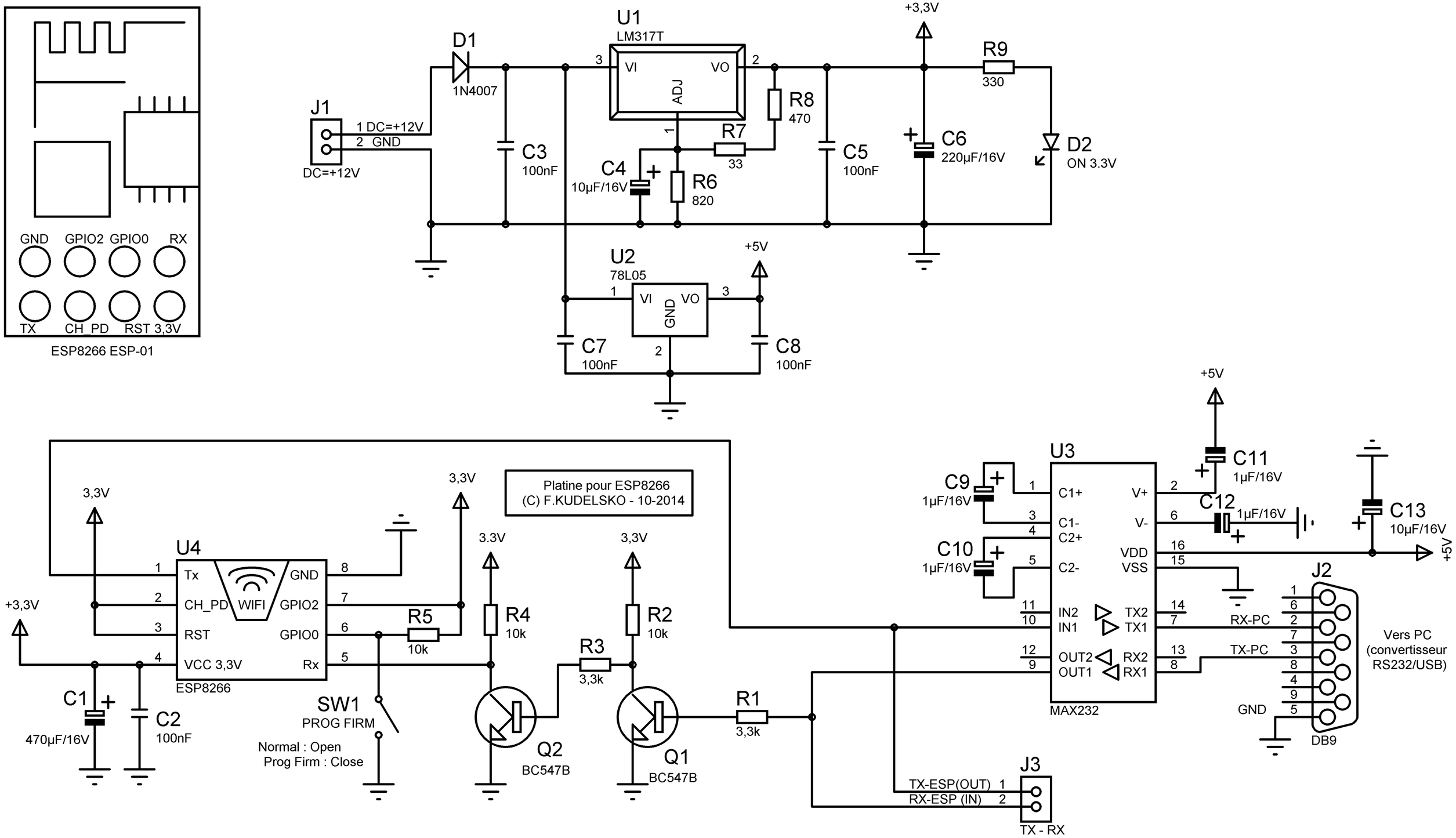
GND GPIO2 GPIO0 RX
TX CH_PD RST 3,3V
ESP8266 ESP-01
J1
1 DC=+12V
2 GND
DC=+12V
D1
1N4007
C3
100nF
U1
LM317T
VI
VO
ADJ
R8
470
R7
33
C4
10µF/16V
R6
820
C5
100nF
+3,3V
R9
330
C6
220µF/16V
D2
ON 3.3V
U2
78L05
VI
VO
GND
+5V
C7
100nF
C8
100nF
Platine pour ESP8266
(C) F.KUDELSKO - 10-2014
3,3V
U4
Tx
CH_PD
RST
VCC 3,3V
GND
GPIO2
GPIO0
Rx
WIFI
ESP8266
+3,3V
C1
470µF/16V
C2
100nF
R5
10k
SW1
PROG FIRM
Normal : Open
Prog Firm : Close
3.3V
R4
10k
Q2
BC547B
R3
3,3k
R2
10k
Q1
BC547B
R1
3,3k
U3
C1+
C1-
C2+
C2-
V+
V-
VDD
VSS
IN2
IN1
OUT2
OUT1
TX2
TX1
RX2
RX1
MAX232
C9
1µF/16V
C10
1µF/16V
C11
1µF/16V
C12
1µF/16V
C13
10µF/16V
+5V
J2
RX-PC
TX-PC
GND
DB9
Vers PC
(convertisseur
RS232/USB)
J3
TX-ESP(OUT)
RX-ESP (IN)
TX - RX