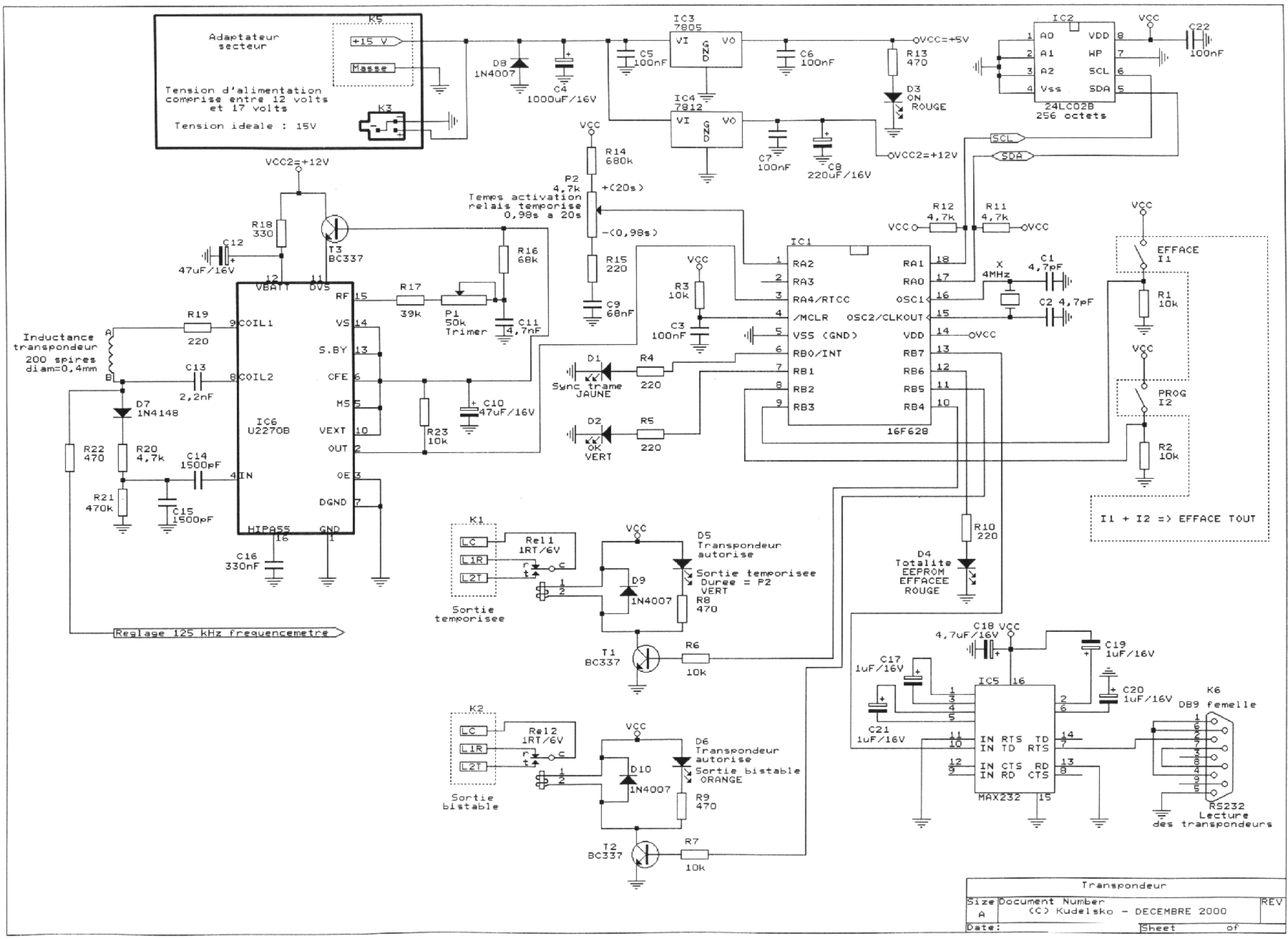
Adaptateur secteur
K5
+15 V
Masse
Tension d'alimentation comprise entre 12 volts et 17 volts
Tension ideale : 15V
K3
D8 1N4007
C4 1000uF/16V
IC3 7805
C5 100nF
C6 100nF
VCC=+5V
R13 470
D3 ON ROUGE
IC4 7812
C7 100nF
C8 220uF/16V
VCC2=+12V
IC2
24LC02B 256 octets
C22 100nF
SCL
SDA
R14 680k
P2 4,7k
+(20s)
Temps activation relais temporise 0,98s a 20s
-(0,98s)
R15 220
C9 68nF
R12 4,7k
R11 4,7k
IC1
16F628
RA2
RA3
RA4/RTCC
/MCLR
VSS (GND)
RB0/INT
RB1
RB2
RB3
RA1
RA0
OSC1
OSC2/CLKOUT
VDD
RB7
RB6
RB5
RB4
X 4MHz
C1 4,7pF
C2 4,7pF
R3 10k
C3 100nF
D1 Sync trame JAUNE
R4 220
D2 OK VERT
R5 220
EFFACE I1
R1 10k
PROG I2
R2 10k
I1 + I2 => EFFACE TOUT
R10 220
D4 Totalite EEPROM EFFACEE ROUGE
VCC2=+12V
R18 330
C12 47uF/16V
T3 BC337
R16 68k
R17 39k
P1 50k Trimer
C11 4,7nF
IC6 U2270B
VBATT
DVS
RF
VS
S.BY
CFE
MS
VEXT
OUT
OE
DGND
HIPASS
GND
COIL1
COIL2
IN
R19 220
Inductance transpondeur 200 spires diam=0,4mm
C13 2,2nF
D7 1N4148
R22 470
R20 4,7k
C14 1500pF
R21 470k
C15 1500pF
C16 330nF
R23 10k
C10 47uF/16V
Reglage 125 kHz frequencemetre
K1
LC
L1R
L2T
Rel1 1RT/6V
Sortie temporisee
D5 Transpondeur autorise
Sortie temporisee Duree = P2 VERT
D9 1N4007
R8 470
T1 BC337
R6 10k
K2
Rel2 1RT/6V
Sortie bistable
D6 Transpondeur autorise
Sortie bistable ORANGE
D10 1N4007
R9 470
T2 BC337
R7 10k
C18 4,7uF/16V
C19 1uF/16V
C17 1uF/16V
C20 1uF/16V
C21 1uF/16V
IC5 MAX232
IN RTS
IN TD
IN CTS
IN RD
TD RTS
RD CTS
K6 DB9 femelle
RS232 Lecture des transpondeurs
Transpondeur
Size A
Document Number
(C) Kudelsko - DECEMBRE 2000
REV
Date:
Sheet of