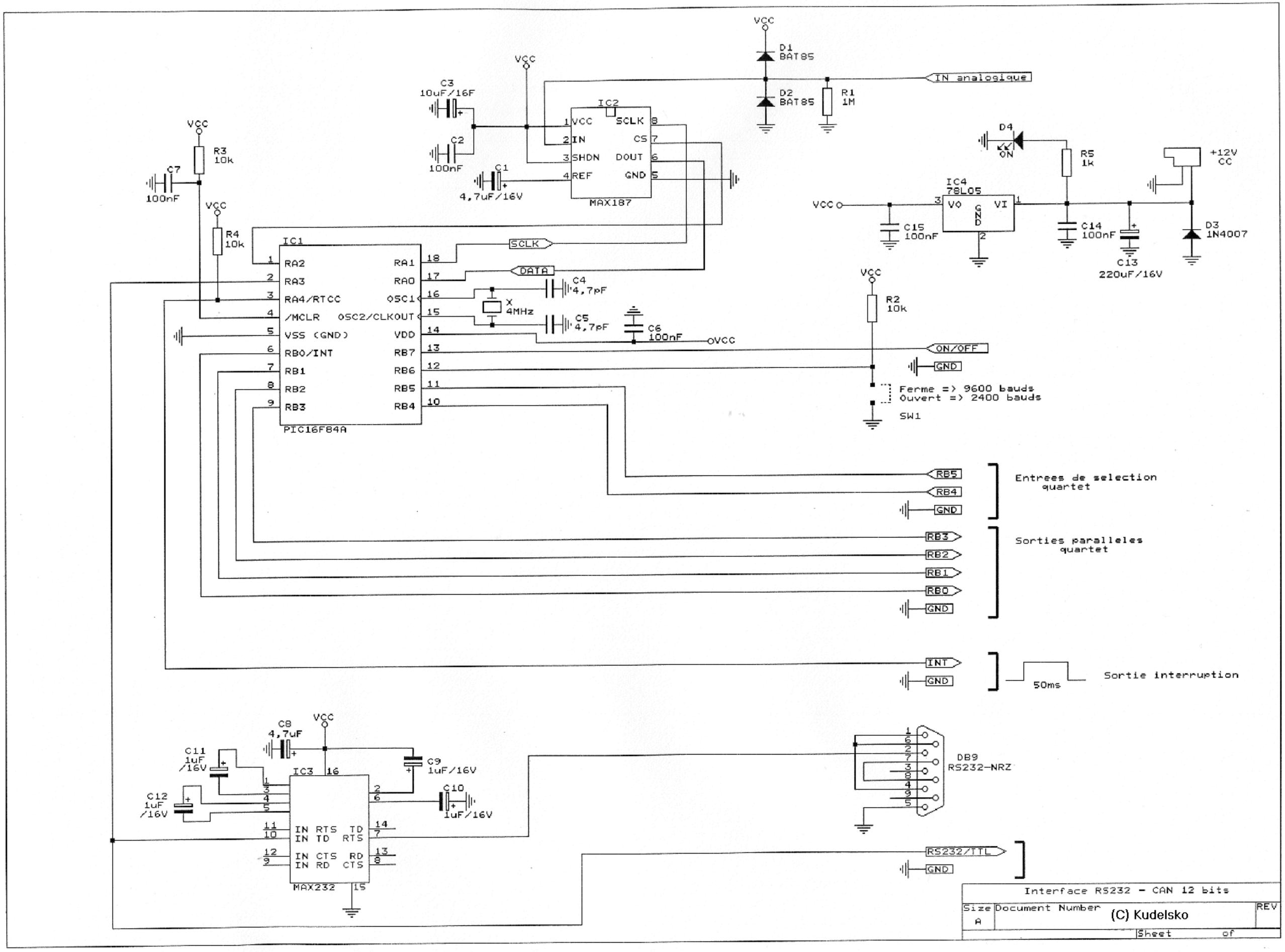
VCC
D1
BAT85
D2
BAT85
R1
1M
IN analogique
C3
10uF/16F
C2
100nF
C1
4,7uF/16V
IC2
MAX187
VCC
SCLK
CS
DOUT
GND
IN
SHDN
REF
R3
10k
C7
100nF
R4
10k
IC1
PIC16F84A
RA2
RA3
RA4/RTCC
/MCLR
VSS (GND)
RB0/INT
RB1
RB2
RB3
RA1
RA0
OSC1
OSC2/CLKOUT
VDD
RB7
RB6
RB5
RB4
SCLK
DATA
C4
4,7pF
X
4MHz
C5
4,7pF
C6
100nF
VCC
ON/OFF
GND
D4
ON
R5
1k
IC4
78L05
VO
GND
VI
C15
100nF
C14
100nF
C13
220uF/16V
+12V
CC
D3
1N4007
R2
10k
Ferme => 9600 bauds
Ouvert => 2400 bauds
SW1
RB5
RB4
GND
Entrees de selection
quartet
RB3
RB2
RB1
RB0
GND
Sorties paralleles
quartet
INT
GND
50ms
Sortie interruption
C8
4,7uF
C11
1uF
/16V
C12
1uF
/16V
IC3
MAX232
IN RTS
IN TD
IN CTS
IN RD
TD
RTS
RD
CTS
C9
1uF/16V
C10
1uF/16V
DB9
RS232-NRZ
RS232/TTL
GND
Interface RS232 - CAN 12 bits
Size
A
Document Number
(C) Kudelsko
REV
Sheet
of