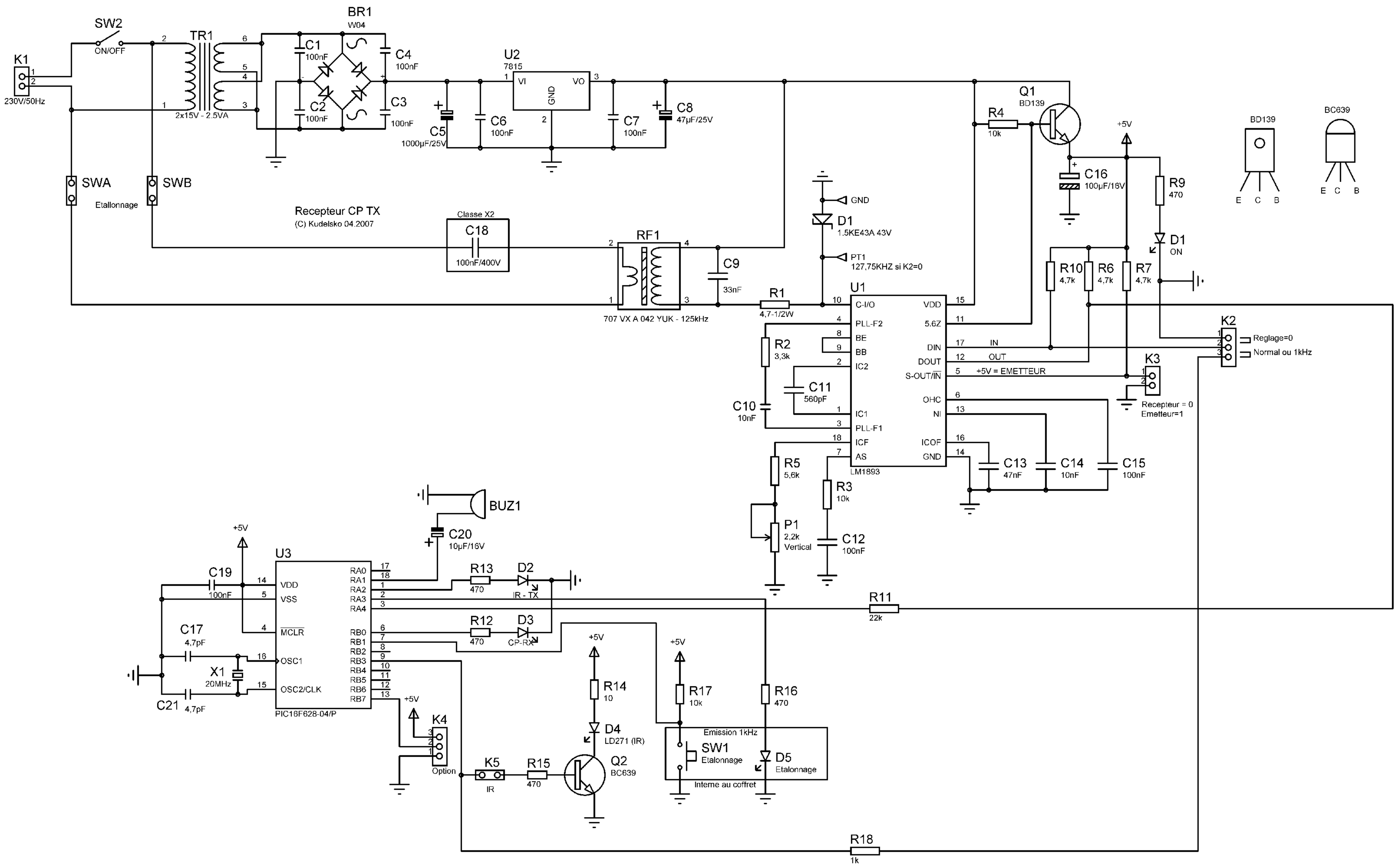
K1
230V/50Hz
SW2
ON/OFF
TR1
2x15V - 2.5VA
BR1
W04
C1
100nF
C2
100nF
C3
100nF
C4
100nF
C5
1000µF/25V
U2
7815
VI
VO
GND
C6
100nF
C7
100nF
C8
47µF/25V
SWA
Etallonnage
SWB
Recepteur CP TX
(C) Kudelsko 04.2007
Classe X2
C18
100nF/400V
RF1
707 VX A 042 YUK - 125kHz
C9
33nF
GND
D1
1.5KE43A 43V
PT1
127,75KHZ si K2=0
R1
4,7-1/2W
U1
LM1893
C-I/O
PLL-F2
BE
BB
IC2
IC1
PLL-F1
ICF
AS
VDD
5.6Z
DIN
DOUT
S-OUT/IN
OHC
NI
ICOF
GND
IN
OUT
+5V = EMETTEUR
R2
3,3k
C11
560pF
C10
10nF
R5
5,6k
P1
2,2k
Vertical
R3
10k
C12
100nF
C13
47nF
C14
10nF
C15
100nF
R4
10k
Q1
BD139
C16
100µF/16V
+5V
R9
470
D1
ON
R10
4,7k
R6
4,7k
R7
4,7k
K2
Reglage=0
Normal ou 1kHz
K3
Recepteur = 0
Emetteur=1
BD139
E C B
BC639
E C B
BUZ1
C20
10µF/16V
U3
PIC16F628-04/P
VDD
VSS
MCLR
OSC1
OSC2/CLK
RA0
RA1
RA2
RA3
RA4
RB0
RB1
RB2
RB3
RB4
RB5
RB6
RB7
C19
100nF
C17
4,7pF
X1
20MHz
C21
4,7pF
R13
470
D2
IR - TX
R12
470
D3
CP-RX
R11
22k
R14
10
D4
LD271 (IR)
R17
10k
R16
470
K4
Option
K5
IR
R15
470
Q2
BC639
Emission 1kHz
SW1
Etalonnage
D5
Etalonnage
Interne au coffret
R18
1k