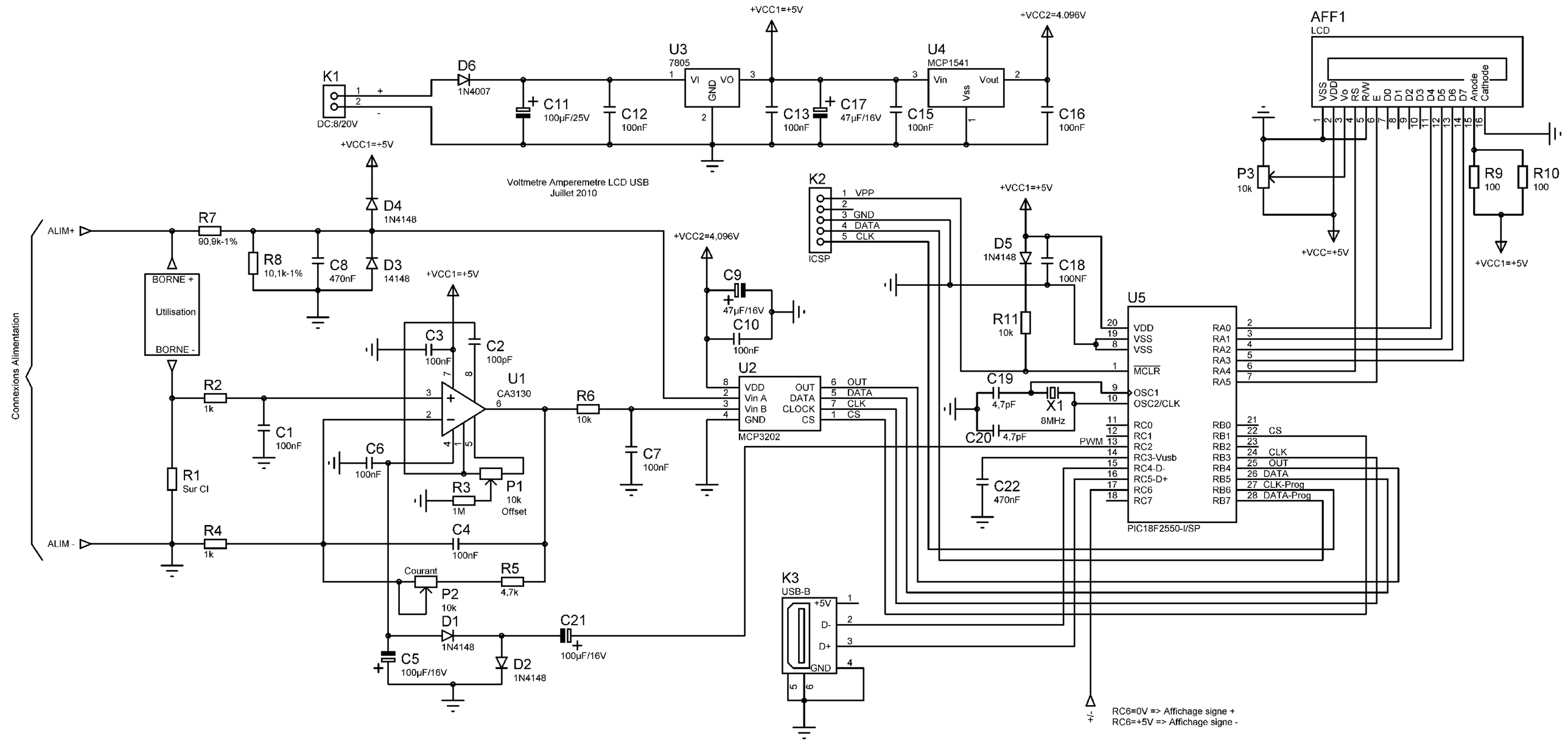
Voltmetre Amperemetre LCD USB
Juillet 2010
Connexions Alimentation
ALIM+
ALIM -
BORNE +
Utilisation
BORNE -
K1
DC:8/20V
D6
1N4007
C11
100µF/25V
C12
100nF
U3
7805
VI
GND
VO
+VCC1=+5V
C13
100nF
C17
47µF/16V
U4
MCP1541
Vin
Vss
Vout
C15
100nF
C16
100nF
+VCC2=4.096V
AFF1
LCD
VSS
VDD
Vo
RS
R/W
E
D0
D1
D2
D3
D4
D5
D6
D7
Anode
Cathode
P3
10k
R9
100
R10
100
+VCC=+5V
R7
90,9k-1%
R8
10,1k-1%
C8
470nF
D4
1N4148
D3
14148
R2
1k
C1
100nF
R1
Sur CI
R4
1k
C3
100nF
C2
100pF
U1
CA3130
C6
100nF
R3
1M
P1
10k
Offset
C4
100nF
Courant
P2
10k
R5
4,7k
D1
1N4148
D2
1N4148
C5
100µF/16V
C21
100µF/16V
R6
10k
C7
100nF
+VCC2=4,096V
C9
47µF/16V
C10
100nF
U2
MCP3202
VDD
Vin A
Vin B
GND
OUT
DATA
CLOCK
CS
K2
ICSP
VPP
GND
DATA
CLK
D5
1N4148
C18
100NF
R11
10k
C19
4,7pF
X1
8MHz
C20
4,7pF
C22
470nF
U5
PIC18F2550-I/SP
VDD
VSS
MCLR
OSC1
OSC2/CLK
RC0
RC1
RC2
RC3-Vusb
RC4-D-
RC5-D+
RC6
RC7
RA0
RA1
RA2
RA3
RA4
RA5
RB0
RB1
RB2
RB3
RB4
RB5
RB6
RB7
PWM
CS
CLK
OUT
DATA
CLK-Prog
DATA-Prog
K3
USB-B
+5V
D-
D+
GND
+/-
RC6=0V => Affichage signe +
RC6=+5V => Affichage signe -