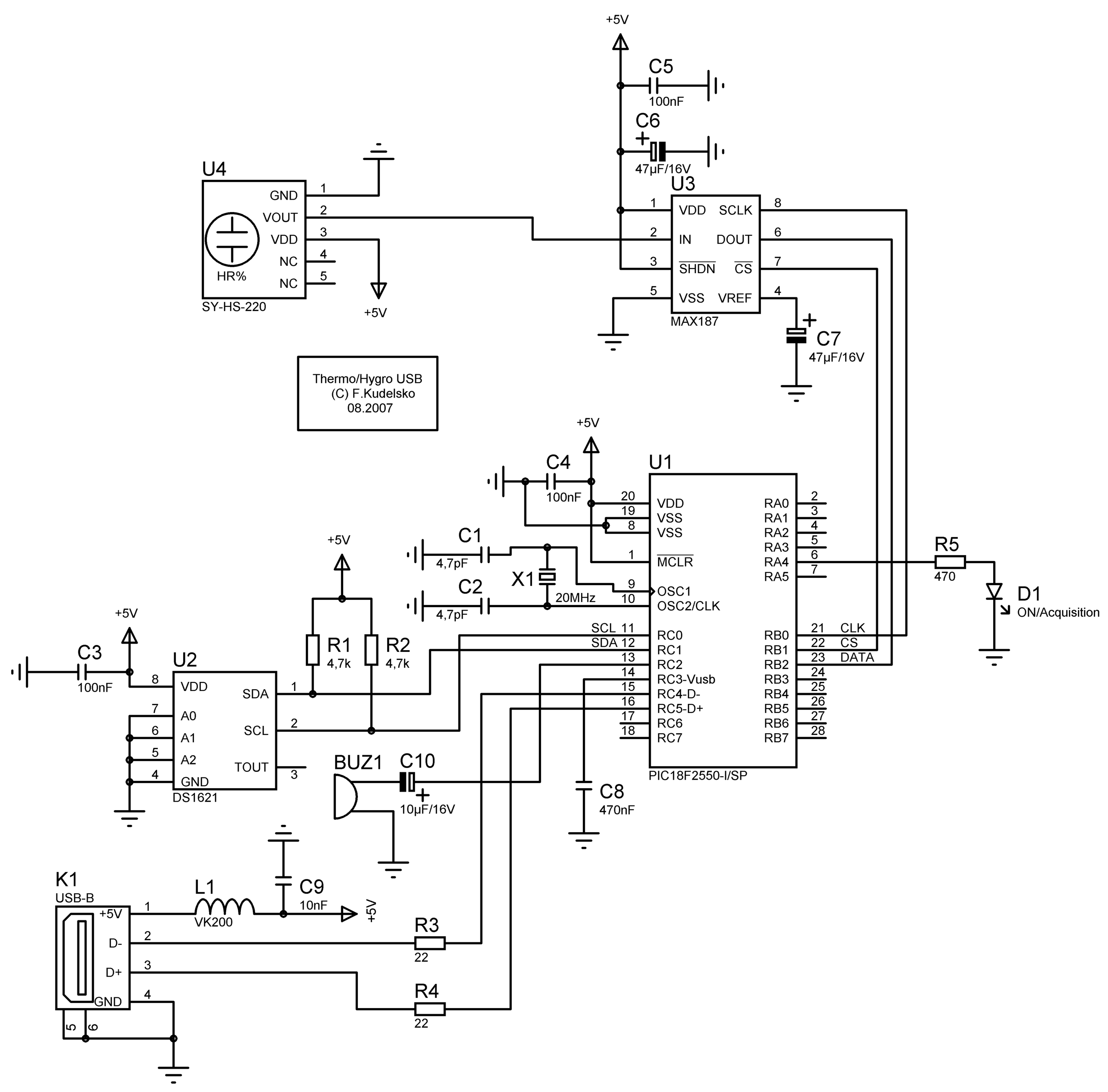
+5V
C5
100nF
C6
47µF/16V
U4
GND
VOUT
VDD
NC
NC
HR%
SY-HS-220
U3
VDD
SCLK
IN
DOUT
SHDN
CS
VSS
VREF
MAX187
C7
47µF/16V
Thermo/Hygro USB
(C) F.Kudelsko
08.2007
C4
100nF
U1
VDD
VSS
VSS
MCLR
OSC1
OSC2/CLK
RC0
RC1
RC2
RC3-Vusb
RC4-D-
RC5-D+
RC6
RC7
RA0
RA1
RA2
RA3
RA4
RA5
RB0
RB1
RB2
RB3
RB4
RB5
RB6
RB7
CLK
CS
DATA
SCL
SDA
PIC18F2550-I/SP
C1
4,7pF
C2
4,7pF
X1
20MHz
R5
470
D1
ON/Acquisition
C3
100nF
U2
VDD
A0
A1
A2
GND
SDA
SCL
TOUT
DS1621
R1
4,7k
R2
4,7k
BUZ1
C10
10µF/16V
C8
470nF
K1
USB-B
+5V
D-
D+
GND
L1
VK200
C9
10nF
R3
22
R4
22